U-LD-650772A,B,C/73A,B,C

Features

1. Low operating current
2. Standard optical power output：7mW (CW)
3. Package Type

Model Number	Description
U-LD-650772A,B,C	TO-33 (ϕ 3.3mm) Package, cap window without lens.
U-LD-650773A,B,C	TO-33 (ϕ 3.3mm) Package, cap window with flat Pb-free lens.

4. Built-in photodiode for monitoring laser power.

Applications

1. Laser projecting/pointer/leveler
2. Bar code scanner
3. Phototherapy
4. Rangefinder
5. Particle counter

External dimensions(Unit : mm)

Pin configuration

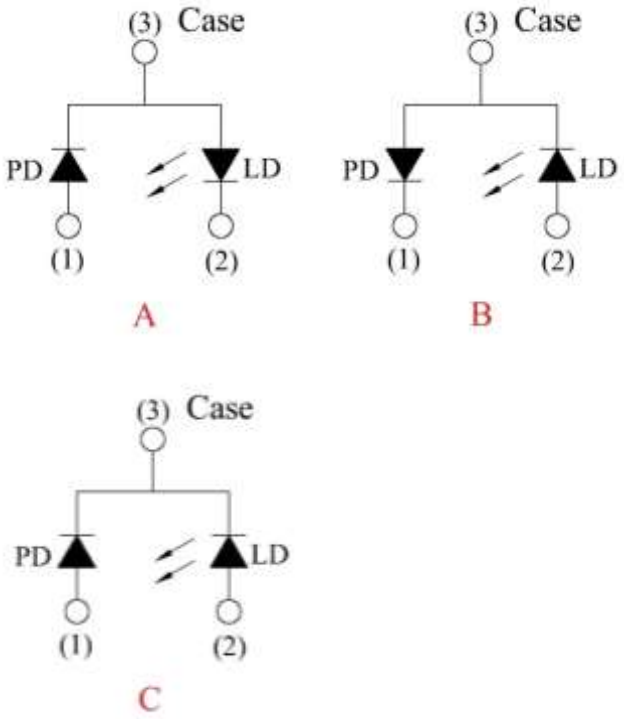

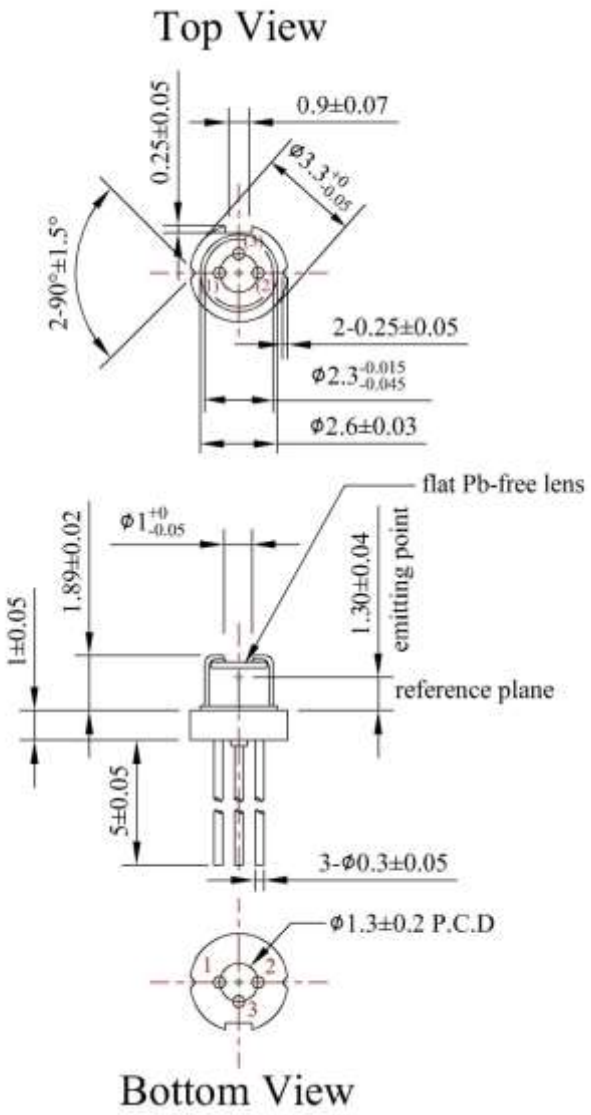

UNION OPTRONICS CORP.
No.156, Gaoshih Rd., Yangmei Dist., Taoyuan City 326, Taiwan
TEL : +886-3-4852687 +886-3-2759468 FAX : +886-3-4754378
E-mail : sales@uocnet.com Website : http://www.uocnet.com

Absolute Maximum Ratings

Parameter	Symbol	Rating	Unit
Optical Output (Tc=25℃)	Po	**10**	mW
LD Reverse Voltage (Tc=25℃)	Vr_LD	**2**	V
PD Reverse Voltage (Tc=25℃)	Vr_PD	**30**	V
Operating Temperature (Case)	Top	-10～+70	℃
Storage Temperature	Tstg	-40～+85	℃

Electrical and Optical Characteristics(Tc=25℃)

Parameter		Symbol	Condition	Min.	Typ.	Max.	Unit
Threshold Current		Ith	-	-	**10**	**14**	mA
Operating Current		Iop	Po=7mW	-	**18**	**22**	mA
Operating Voltage		Vop	Po=7mW	-	**2.1**	**2.3**	V
Slope Efficiency		η	Po=1.75-5.25mW	**0.7**	**0.9**	-	mW/mA
Monitor Current		Im	Po=7mW, V_{RD}=5V	**0.05**	**0.2**	**0.5**	mA
Beam Divergence (FWHM)	Parallel	$\theta_{//}$	Po=7mW	**5**	**8**	**12**	deg.
	Perpendicular	$\theta_{\perp}$	Po=7mW	-	**36**	-	deg.
Lasing Wavelength		λ	Po=7mW	**640**	**654**	**660**	nm

◎ $\theta_{//}$ and $\theta_{\perp}$ are defined as the angle within which the intensity is 50% of the peak value.

Typical characteristic curves

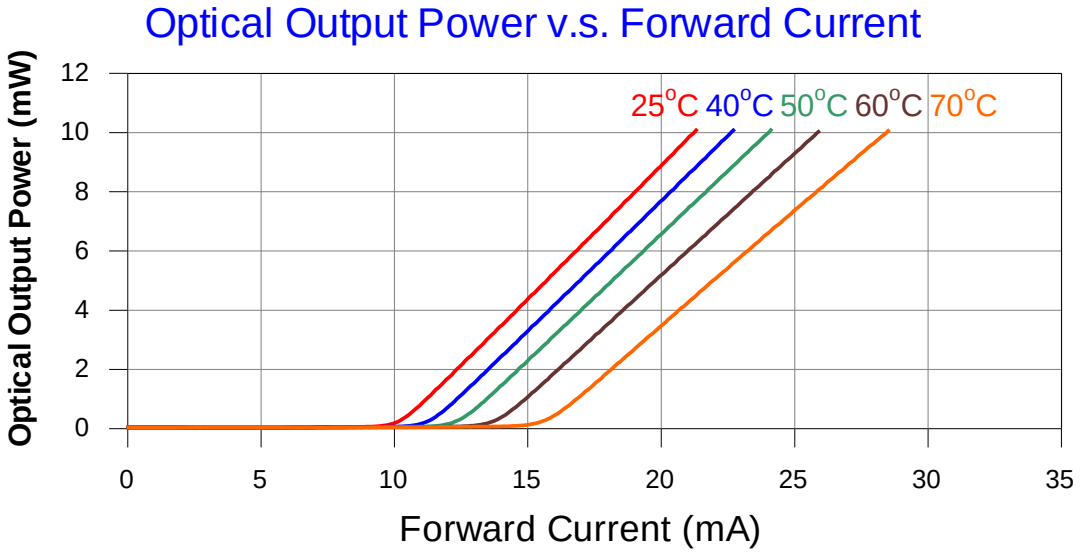

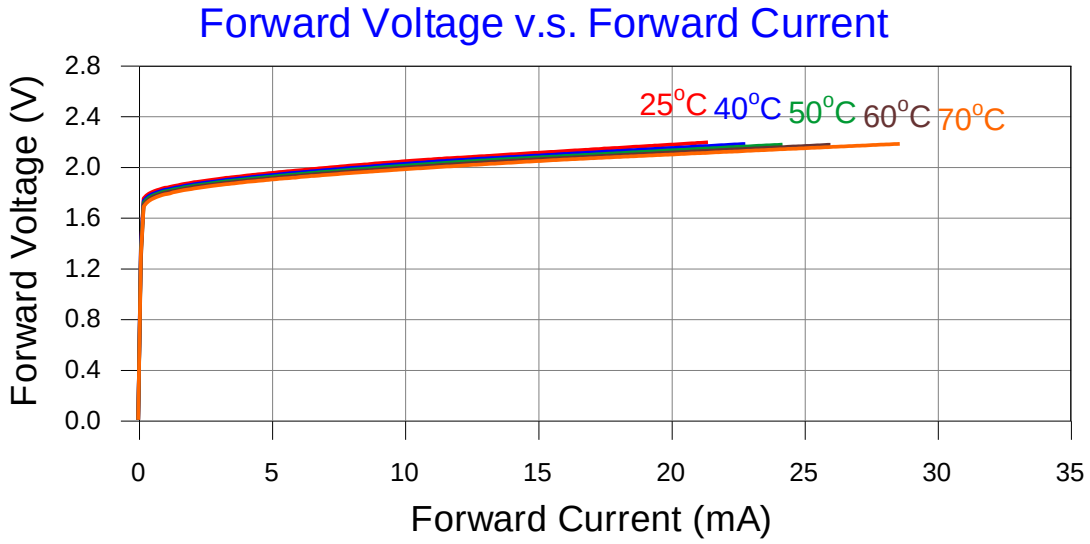

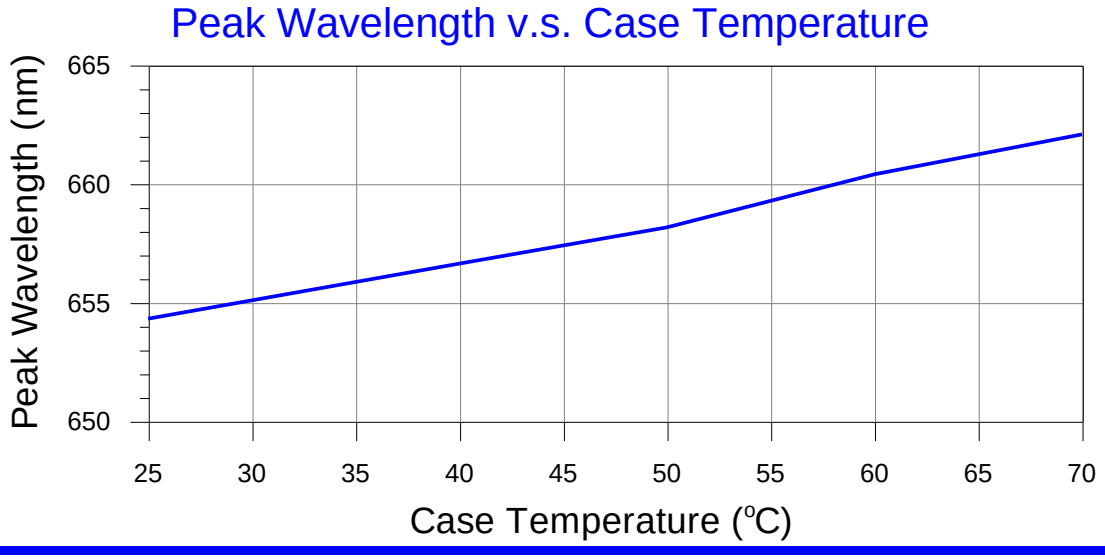

Far-Field Pattern

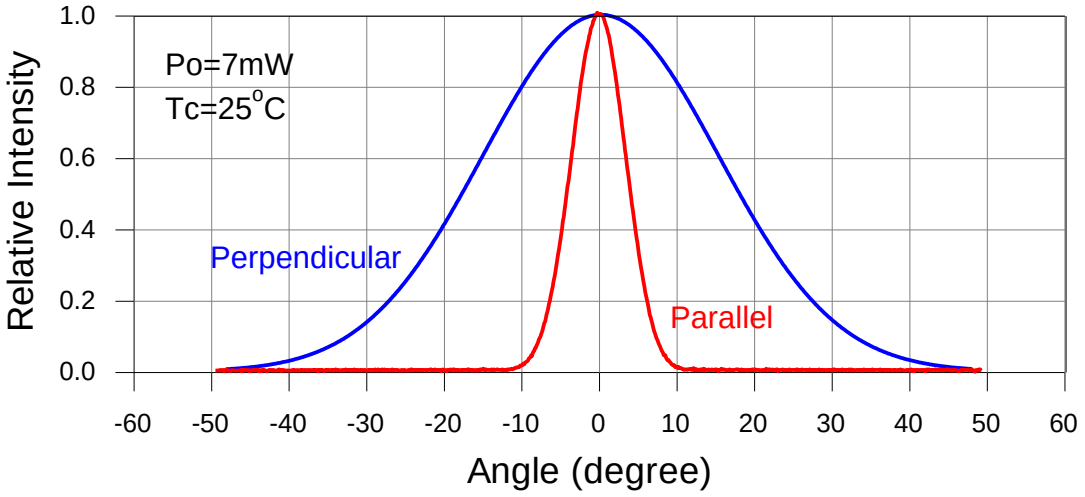

Monitor Current v.s. Optical Output Power

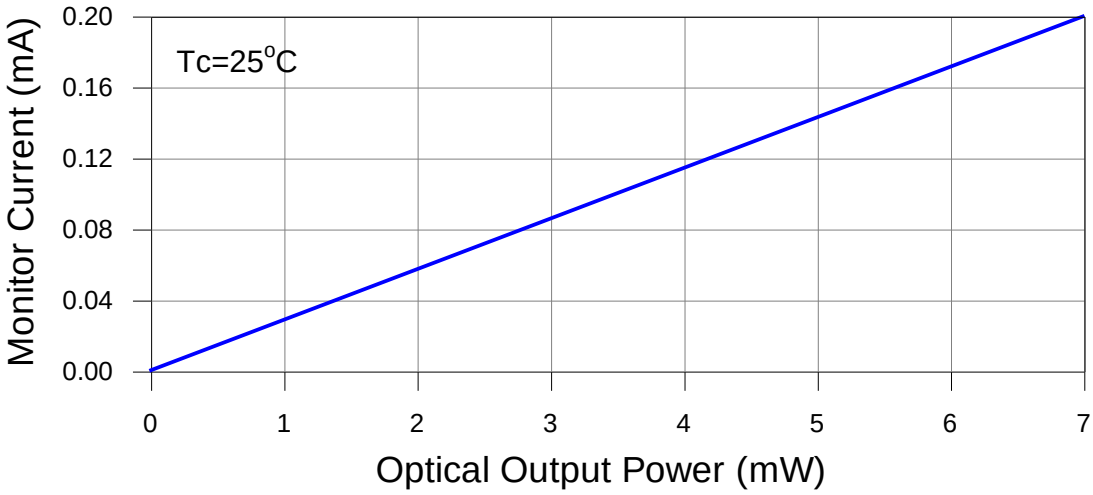

Slope Efficiency v.s. Case Temperature

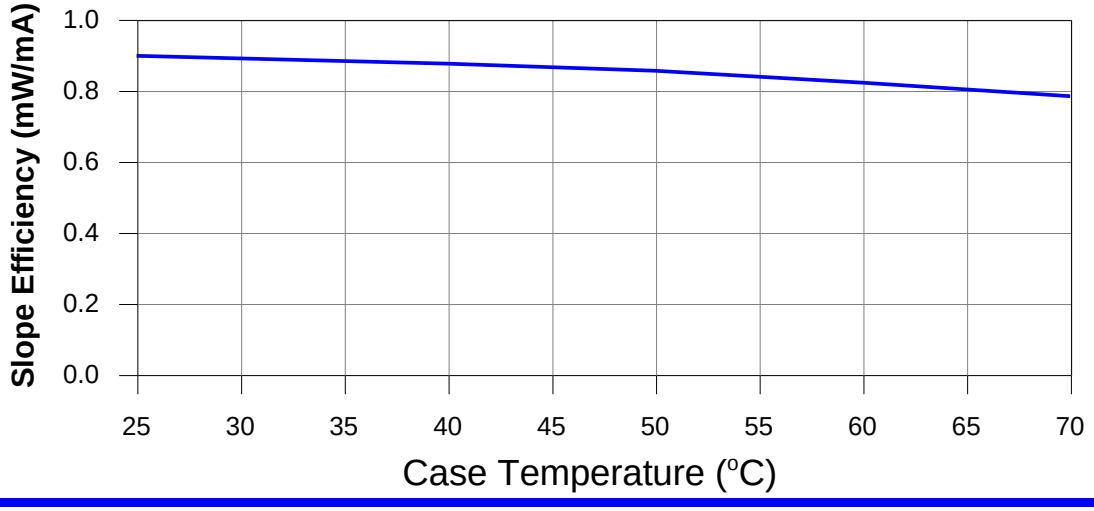

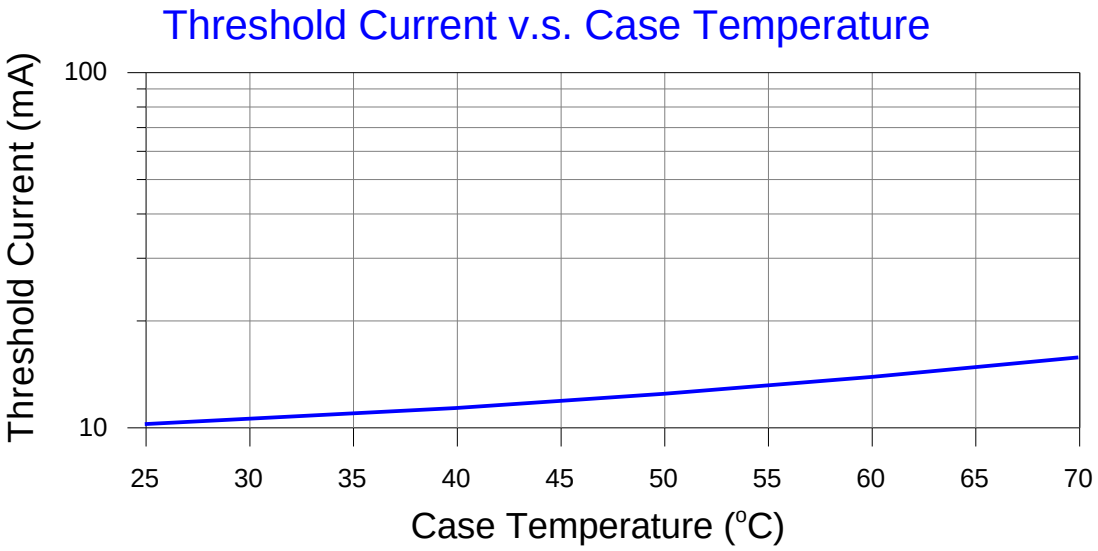

Precautions

QUALITY ASSURANCE

After any processing of laser chip or laser diode TO-CAN (LD) by the customer, the performance, yield and reliability of the product, in which the chip or LD is applied, are subject to change due to customer's handling, assembly, testing, and processing. Because laser chip and LD are strongly affected by environmental conditions, physical stress, and chemical stresses imposed by customer that are not in Union Optronics Corp. (UOC) control and hence no guarantee on the characteristics and the reliability at all after the shipment. Also, UOC does not have any responsibility for field failures in a customer product. When attaching a heat sink to laser chip or LD, be careful not to apply excessive force to the device in the process.

SAFETY PRECAUTIONS

Although Union Optronics Corp. (UOC) keeps improving quality and reliability of its laser chip and laser diode TO-CAN (LD), semiconductor devices in general can malfunction or fail due to their intrinsic characteristics. Hence, it is required that the customer's products are designed with full regard to safety by incorporating the redundancy, fire prevention, error prevention so that any problems or error with UOC laser chip or LD does not cause any accidents resulting in injury, death, fire, property damage, economic damage, or environmental damage. In case customer wants to use UOC laser chip or LD in the systems requiring high safety, customer is requested to confirm safety of entire systems with customer's own testing.

SPECIFICATIONS ARE SUBJECT TO CHANGE WITHOUT NOTICE.

The information provided by Union Optronics Corp. (UOC), including but not limited to technical specifications, recommendations, and application notes relating to laser chip or laser diode TO-CAN (LD) is believed to be reliable and accurate and is subject to change without notice. UOC reserves the right to change its assembly, test, design, form, specification, control, or function without notice.